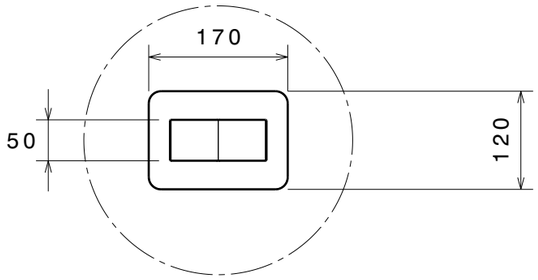

Detail A

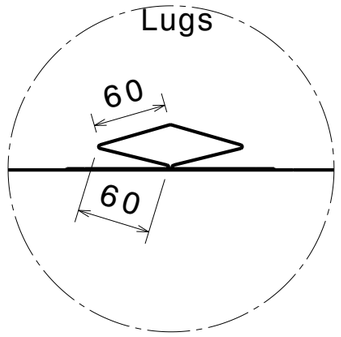

Detail B

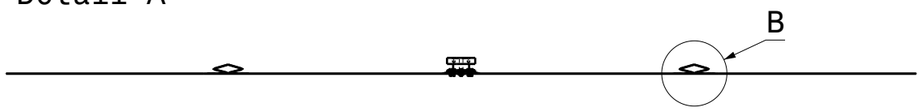

Side View

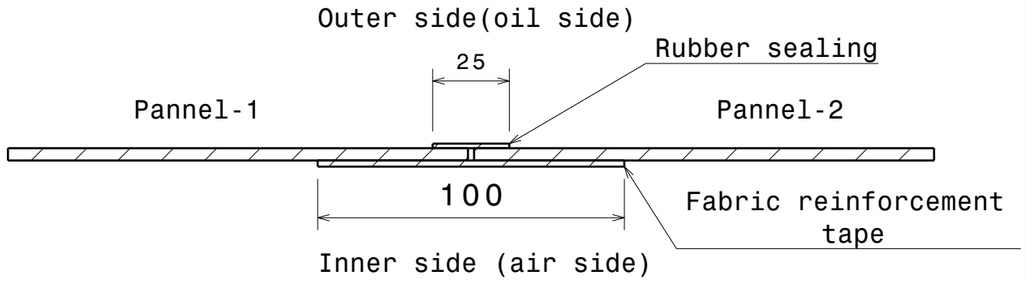

Hot vulcanised joint (A-A)

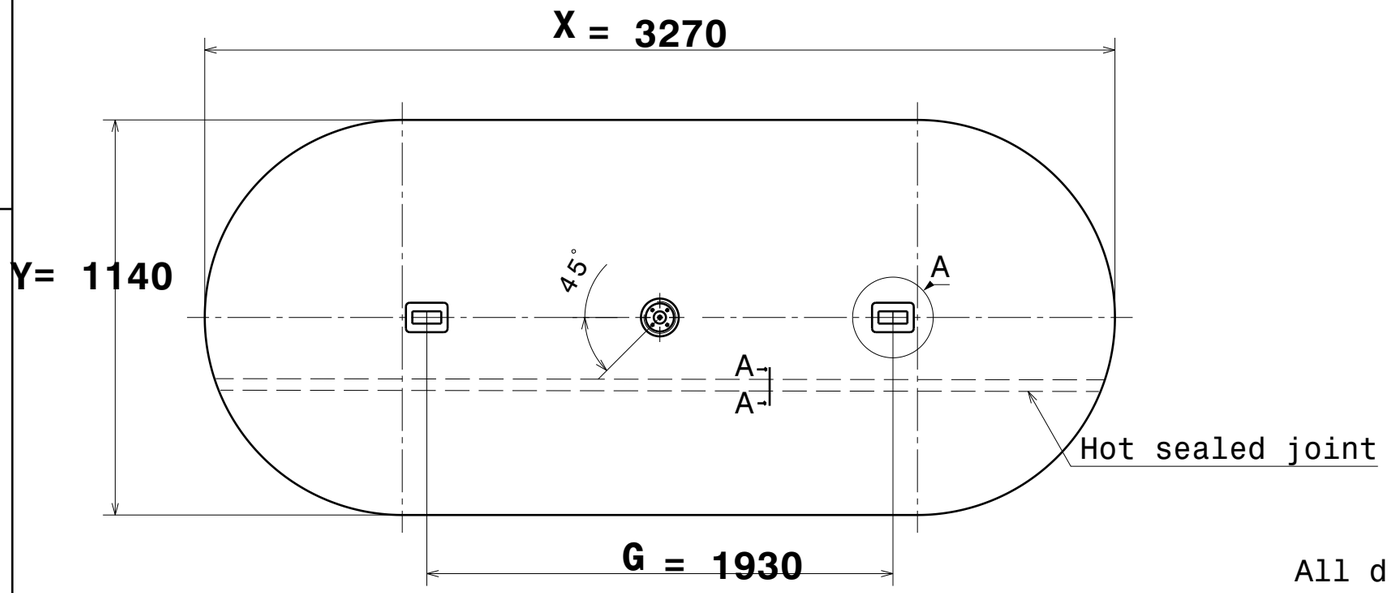

Front view

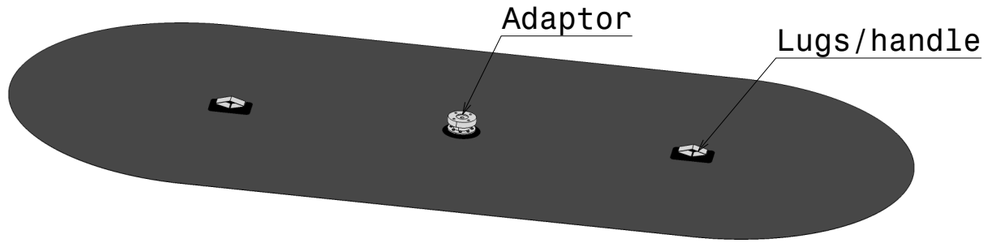

Isometric view

All dimensions are in mm
The tolerancess for the unspecified diamentions are as per IS2102 (very course)/ISO 2768-1

Note:
Base fabric - Polyamide 6
Inside coating material (Air side) - Weather, Heat, Ozone and UV resistant
Outside coating material (Oil side) - Heat and Oil resistant
Joint : Applicable, if width id more than 1640mm

For more details:
Contact on +91 9874060606 / +91 9284785317
Email : unirubtechno@gmail.com

This drawing is our property. It can't be reproduced or communicated without our written agreement.

Unirub Techno India Pvt. Ltd.

DRAWN BY	PRC
CHECKED BY	BVY
Date : 11/04/25	
DRAWING TITLE	**GA drawing**
SIZE	
DRAWING NUMBER	
REV	
SCALE	
WEIGHT(kg)	
SHEET	1/1

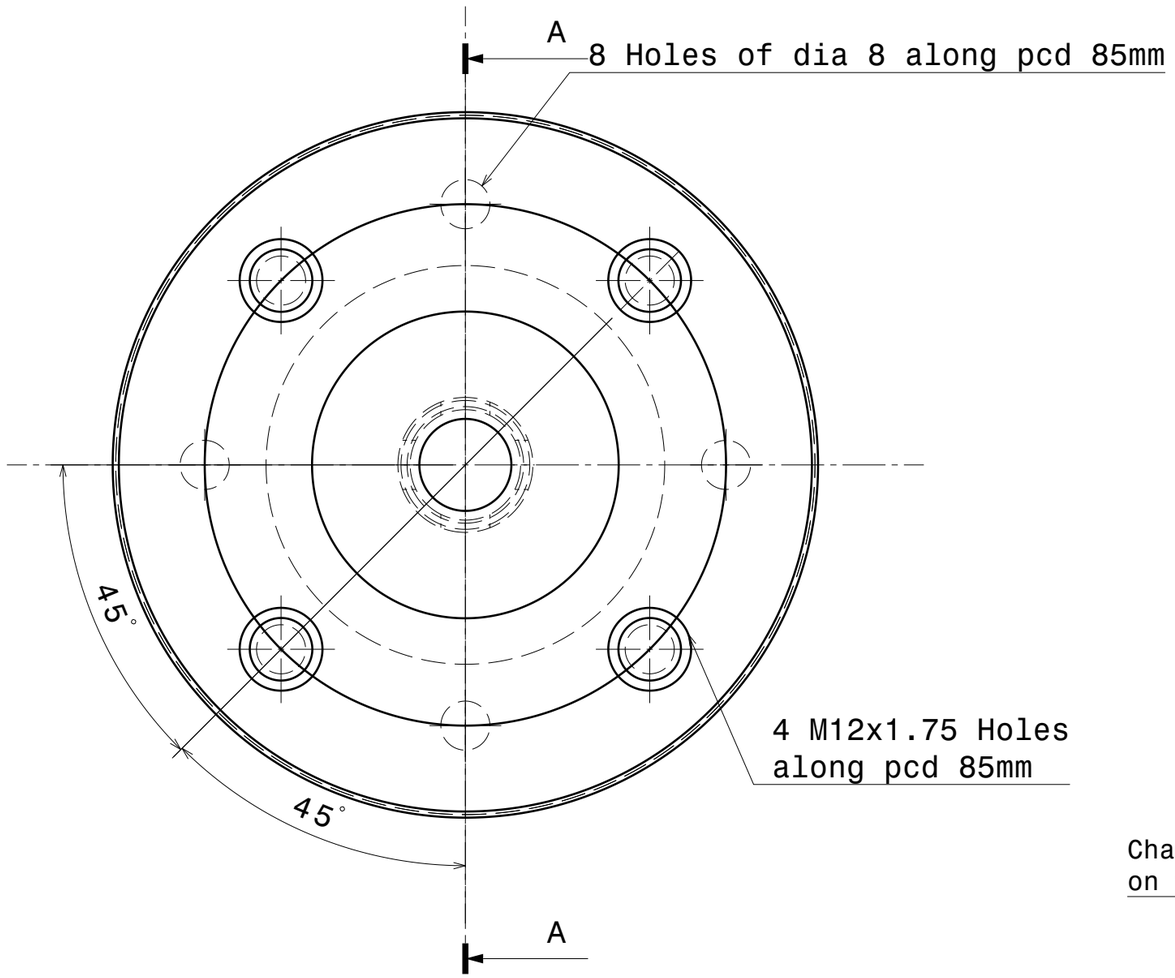

Front view

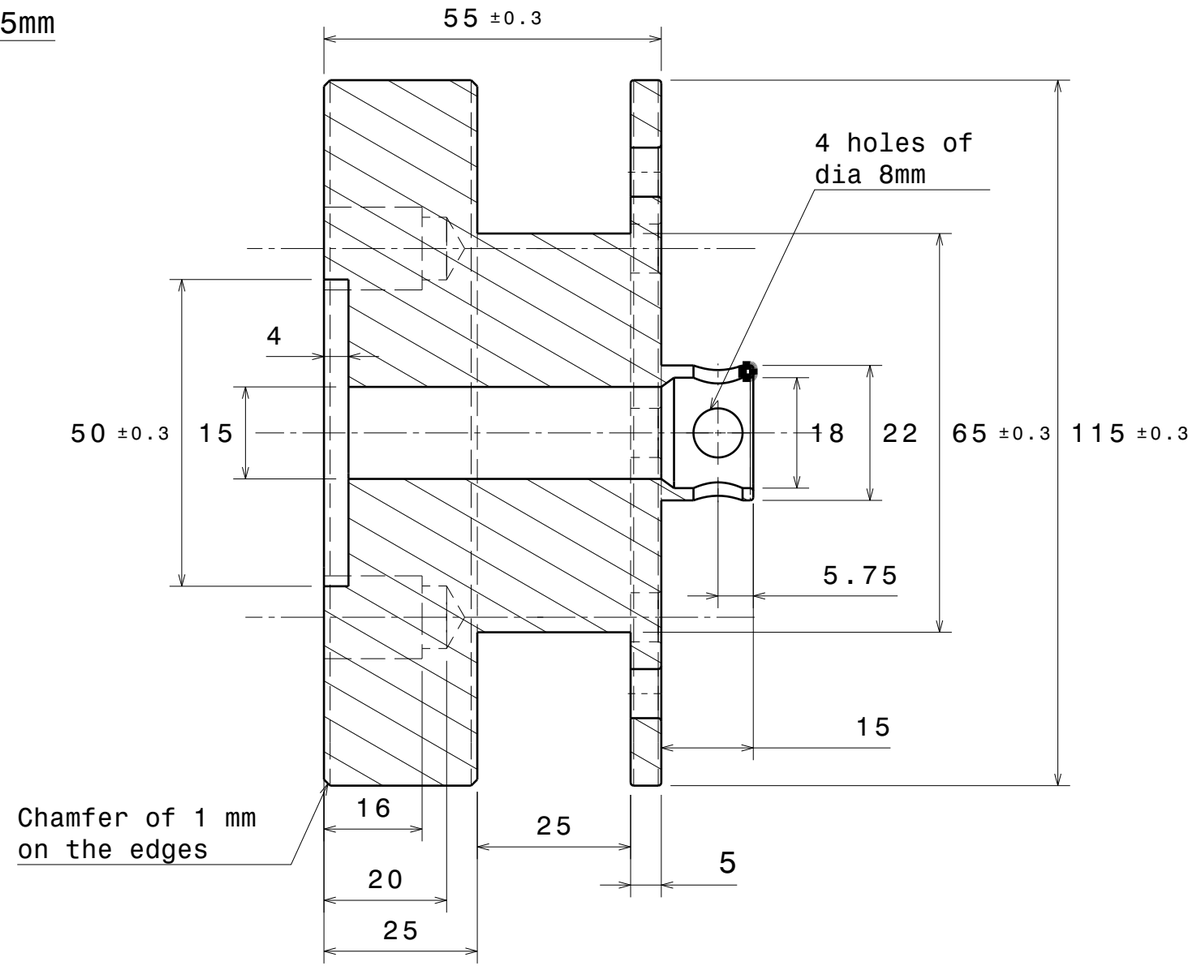

Section view A-A

All diamentions are in mm.
The tolerancess for all the diamentions are as per IS2102 (medium)
Note:
1.Material: MS. as per IS2062 - Fe 410WA/WB
C.D. plated as per IS: 1572 - Cd8
2.Drilled holes must be perpendicular to surface

For more details:
Contact on +91 9874060606 / +91 9284785317
Email : unirubtechno@gmail.com

This drawing is our property.
It can't be reproduced
or communicated without
our written agreement.

DRAWN BY	PRC
CHECKED BY	BVY

Unirub Techno India Pvt. Ltd.

DRAWING TITLE **Adapter for Aircell**

SIZE	DRAWING NUMBER	REV
	UTIND_202411_004	

SCALE 1:1	WEIGHT(kg)		SHEET 1/1

Unirub
Techno India Pvt. Ltd.

Unirub

Techno India Pvt. Ltd.

Get No. 354/355 & 364, At Post Takve Budruk,
Taluka - Maval, District - Pune - 412 106.

AIRCELL

For Oil Filled Transformers

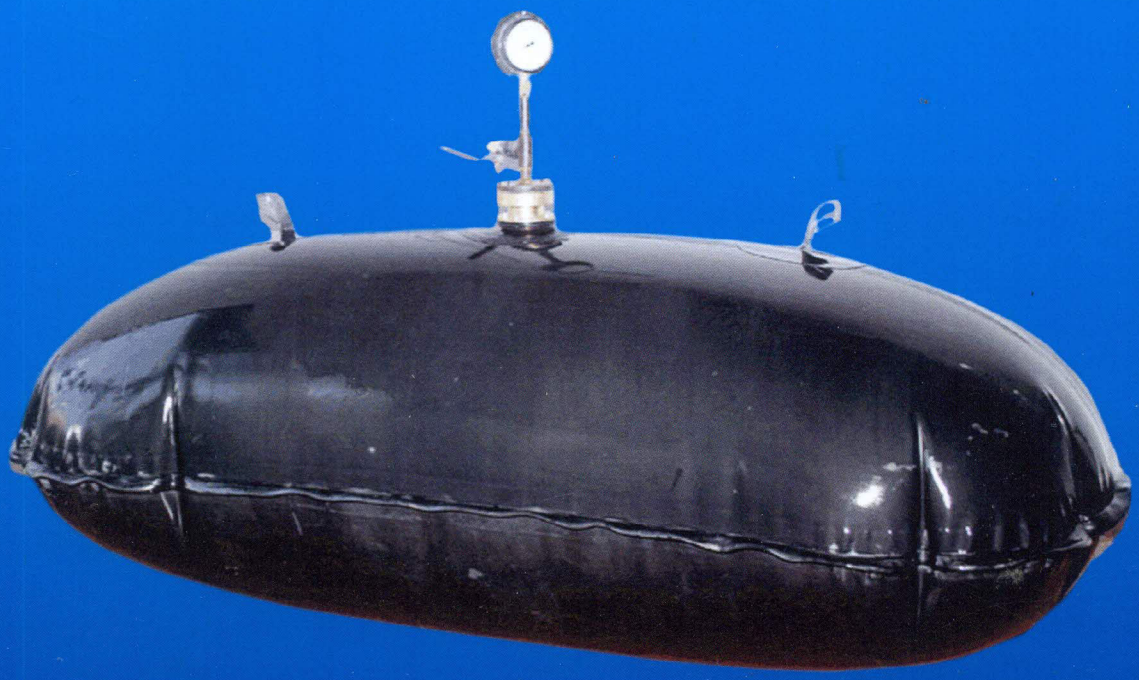

• ADVANTAGES •

- Prevents contact of surrounding air with oil.
- Eliminates oxidation and hydrolysis of the oil due to air contact.
- Offers excellent resistance to oxygen, ozone, nitrogen and humidity.
- Excellent impermeability to oil and gases.
- Dail type indicator can fitted, even when Aircell is provided in the conservator of Transformer.
- Prevents any free volume in the Conservator.
- Long service life without maintenance.

An ISO 9001 : 2008 Certified Co.

● Type Test of Aircell (Flexible Separator)

A) T = Routine Test :

Sr. No.	Test	Test Method	Specification		
			Nitrile Rubber	Neoprene Rubber	Hypalon Rubber
1	Hardnees, Shore° A	IS:3400 (Part2)	65+5/-4 Shore° A	60+5 / -4 IRHD	-
2	Specific gravity	IS:3400 (Part9)	1.33 ± 0.04	1.36 + 0.04	-
3	Tensile strength	IS:3400 (Part1)	12.6 Mpa min.	13 Mpa min.	-
4	Elongation ata break, %	IS:3400 (Part1)	250%, min	250%, min.	-
5	Colour	Visual	Black	Black	Olive Green

For Coated Fabric

Sr.No.	Test	Test Method	Specification	Sr.No.	Test	Test Method	Specification
1	Material	IS:667 - 1981	Nylon6, Plain weave of suitable constrction	4	Weight of basic fabric	IS:1716 (Part1)	200gm/m², min
2	Thickness			5	Colour	Visual	Air side - Olive Green/ Oil side - Black
	Polyamide fabric	IS:7702	0.5 ± 0.05 mm				
	Coated fabric	IS:7016 (Part1)	1.25 ± 0.1 mm	6	Tear strength along warp & weft	IS:7016 (Part3)	300 N (min)
3	Mass of coated fabric						
	a) Oil side coating		455gm/m², min	7	Breaking strength along warp & weft	IS:7016 (Part2)	3KN/50 mm width (min)
	b) Air side under & outer coating comp		615gm/m², min	8	Elongation at break along warp & weft		25% & 30% (min)
	c) Coated fabric		1400+200/-80gm/m²				

B) T1 = Once in a 3 Year :

Sr. No.	Test	Test Method	Specification		
			Nitrile Rubber	Neoprene Rubber	Hypalon Rubber
1	Resistance to heat Ageing in Air at 100°C for 168 hrs IS:3400(Part4)				
	a) Change in Hardness	IS:3400(Part2)	+ 10% max		
	b) Change in T.S.	IS:3400(Part1)	- 25% max		
	c) Change in E.S.	IS:3400(Part1)	- 40% max		
2	Compression Set, at 70°C for 24+0/-2hrs	IS:3400(Part10) (Large type test specimen)	20% max	25% max	-
3	Adhesion to pdyamide 6 facric (WARP/WEFT)	IS:3400(Part5)	45 N/2.5cm width of the strip (min)		-
4	Flexibility at Low Temp (-10°C)	Sample kept in cold chamber for 5 hours & bent to 180° on 3mm dia mandrel	Shall not crack or become brittle		
5	Adhesion to & corrosion of metal at 70°C for 168 hrs	method A 37 BS 903 using carbon steel	There shall be no corrosion or pitting of the metal. Compound shall not adhere to the metal or show any sign of liquid extraction		-
6	Polymer Identification	ISO-4650-2005	Acrylonitrile Butadiene Rubber(NBR)	Polychloroprene Rubber(CR)	Clorosuphonated polyethylene Rubber(CSM/Hypaon)

Sr.No.	Test	Test Method	Specification	Sr.No.	Test	Test Method	Specification
	Only For Nitrile Rubber				**Only For Hypalon Rubber**		
7	Ageing in Transformer oil to IS:335 at 100°C for 168 hrs IS:3400(Part6)			8	Hardness, Shore° A	IS:3400(Part2)	65 ± 5 Shore° A
	a) Change in mass, %	IS:3400(Part6)	+ 3% max	9	Specific gravity	IS:3400(Part9)	1.6 ± 0.05
	b) Change in Volume, %	IS:3400(Part6)	+ 10% max	10	Tensile strength	IS:3400(Part1)	8 Mpa min.
	c) Change in Hardness	IS:3400(Part2)	± 3 IRHD max	11	Elongation at break, %	IS:3400(Part1)	250% min.
	d) Change in T.S., %	IS:3400(Part1)	- 15% max				
	e) Change in E.B. %	IS:3400(Part1)	- 35% max				
	Only For Coated Rubber						
Sr.No.	Test	Test Method	Specification	Sr.No.	Test	Test Method	Specification
14	Blocking Resistance	IS:7016(Part9)	No Blocking	17	Resistance to Damage by Flexing	IS:7016(Part4) specimen size 25mm x 150 mm)	shall withstand 1lakh cycles with out damage
15	Resistance to Perforation	Mfg. method	390 N min.				
16	Measurement of out Growth (WARP/WEFT)	Mfg method	shall pass the test	18	Low Temp. Bend Test at - 20°C	IS:7016 (Part10) Sample kept in cold chamber for 5 hours & bent to 180° on 3 mm dia mandrel	Shall pass

C) T2 = Once in a 5 Year :

Sr.No.	Test	Test Method	Specification	Sr.No.	Test	Test Method	Specification
	Only For Nitrile Rubber				**Only For Hypalon Rubber**		
1	Ageing of oil as per BS:5354			3	Resistance to Ozone at 40°C,03 concentration & 200 ±20 pphm for 96 hrs.	IS:3400(Part 20)	Shall not develop crack
	a)Increase in Acidity	IS:1448 (Part 2)	0.1 mg KHO/gm, max				
	b) Increase in sludge content	IS:12177	0.05% max				
2	Ageing in Transformer oil to IS:335 AT 100°C for 30 days (IS:3400 Part6)				**Only For Coated Fabric**		
	a) Change in Hardness	IS:3400(Part 2)	± 5 IRHD max	4	Air permeability	ASTM D 1334	5 x 10^{-12} cm^3. cm/ cm^2. SHg max
	b) Change in Volume, %	IS:3400 (Part 6)	+12% max				
				5	Bursting strength	IS:7016 (Part 6)	7 Mpa (min)

Note : We continuously review specifications and where appropriate, introduce modifications. We, therefore, reserve the right to change specifications in this catalogue without prior notice.

● DESCRIPTION & WORKING

An Aircell is a sealed envelop made out of highly resistant polyamide fabric coated with synthetic elastomers. The Aircell hangs in conservator. It is held in position by connecting flange and two straps on either side. Please see illustrative figures.

When oil level in conservator increases, Aircell gets deflated there by expelling air out and when oil level drops, Aircell inflats and allows air to come in. Thus Aircell breathes Without allowing outside air to get in contact with transformer oil. There are many advantages due to introduction of Aircell in conservator. They are listed on Page - 1.

● PACKING

Each Aircell is suitably packed in corrugated paper box.

FIG. 1 ● MATERIAL CROSS SECTION

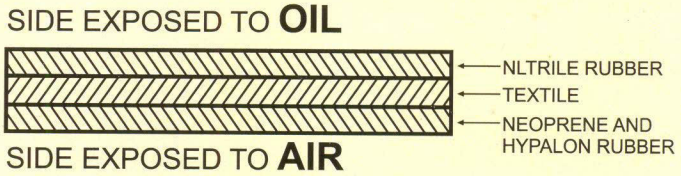

FIG. 2 ● CYLINDRICAL CONSERVATOR APPLICATION

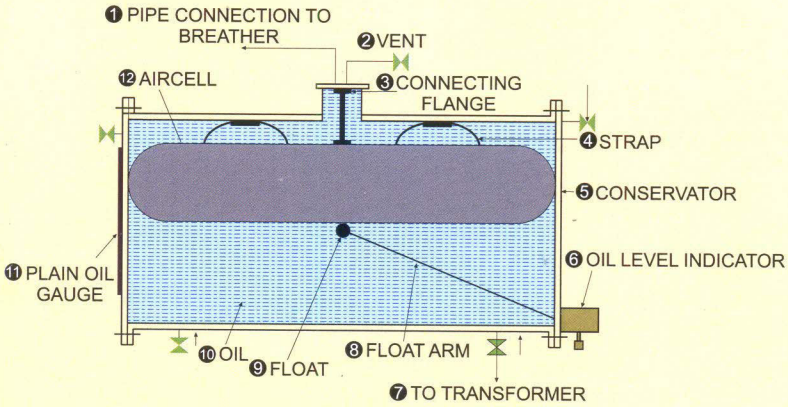

● **Note :** only item No. 12, 4 & 3 supplied by us.

FIG. 3 ● STRAP

FIG. 4 ● FLANGE ASSEMBLY

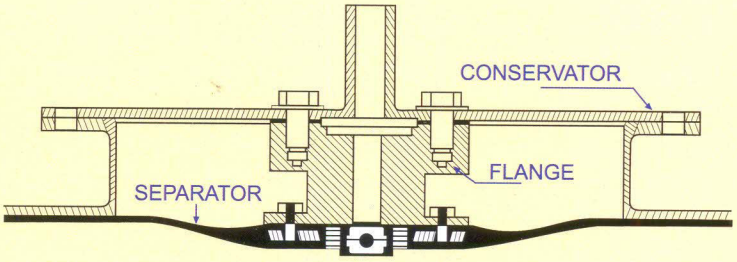

The flange is fitted to the vulcunised insert. This insert is fully embeded by vulcunsing into the separator material thus ensuring that the unit is fully sealed.

FIG. 5 ● CONNECTING FLANGE

● DIMENSIONS (All dimensions are in mm)

FIG. 6

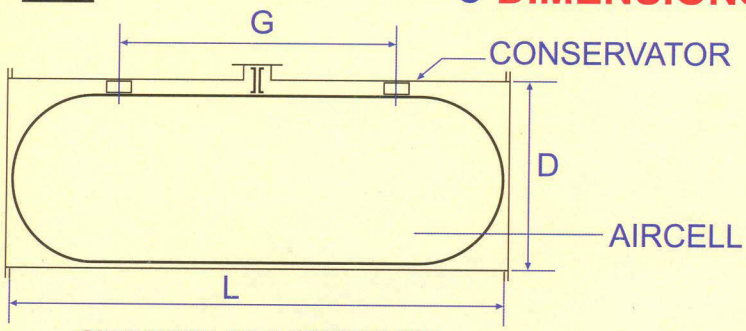

SIDE VIWS AS ASSEMBLED

L = Inside Length of Conservator.
D = Inside Diameter of Conservator.

FIG. 7

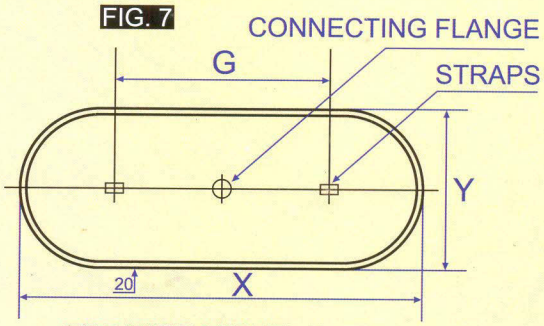

TOP VIWS UNINFLATED

X = Length of Flat Aircell.
Y = Width of Flat Aircell.
G = Distance between Straps.

● HOW TO ORDER

Your requirement can be specified by
1. Giving dimensions of conservator L & D
or by
2. Giving dimensions X, Y, G (See Formula)

Formula : $\mathbf{Y} = \frac{3.142 \times D}{2} + 40$ mm, $\mathbf{X} = L - D + Y$, $\mathbf{G} = X - Y - 200$

Example : For Conservator of 700 dia x 2000 long
Values will be **X** = 2440, **Y** = 1140, **G** = 1100

FAULTS & REMEDIES

The Aircell is manufactured considering all aspects of transformer application. In normal course of use, handling, storing, fitting, the Aircell will give goods service. However incase of mishandling or accident the fabric can get ruptured or the joint may open, leading to leakage of air in conservator. For minor repairs a kit with working instructions is provided along with each Aircell. For major damage the Aircell will have to be returned to the factory. Please note that it will not be possible to depute our representative to site to asses / inspect the damage / fault.

Flexible Separator (AIRCELL)

Dimension : The dimensions of the flexible separator are determined according to the size of the conservators. Here are the separators which are resently manufactured for cylindrical conservators with flat ends as below. Other sizes can be as per requirements.

Sr. No.	Type	Expansion Volume (Liters)	Conservator Dimensions			Aircell Dimensions (mm)		
	Reference		Diameter X (mm)	Length Y(mm)	Volume Z (Liters)	Width (B)	Length (A)	Fixing Strap Distance (E)
1	STP 500 - 500	500	500	2710	532	825	3035	2010
2	STP 500 - 600	500	600	1970	557	982	2352	1170
3	STP 750 - 600	750	600	2850	806	982	3232	2050
4	STP 750 - 700	750	700	2180	839	1140	2620	1280
5	STP 1000 - 700	1000	700	2830	1089	1140	3270	1930
6	STP 1000 - 800	1000	800	2260	1136	1297	2757	1260
7	STP 1500 - 800	1500	800	3250	1634	1297	3747	2250
8	STP 1500 - 900	1500	900	2660	1692	1454	3214	1560
9	STP 2000 - 900	2000	900	3440	2188	1454	3994	2340
10	STP 2000 - 1000	2000	1000	2880	2262	1611	3491	1680
11	STP 2500 - 1000	2500	1000	3520	2765	1611	4131	2320
12	STP 2500 - 1100	2500	1100	3000	2851	1768	3668	1700
13	STP 3000 - 1000	3000	1000	3800	2985	1611	4411	2600
14	STP 3000 - 1100	3000	1100	3520	3345	1768	4188	2220
15	STP 3000 - 1200	3000	1200	3050	3449	1925	3775	1650
16	STP 3000 - 1300	3000	1300	2512	3334	2082	3294	1012
17	STP 3500 - 1000	3500	1000	4740	3723	1611	5351	3540
18	STP 3500 - 1300	3500	1300	2800	3717	2082	3582	1300
19	STP 4000 - 1200	4000	1200	3940	4456	1925	4665	2540
20	STP 4000 - 1300	4000	1300	3450	4579	2082	4232	1950
21	STP 4500 - 1300	4500	1300	3600	4778	2082	4382	2100
22	STP 5000 - 1300	5000	1300	4200	5575	2082	4982	2700
23	STP 5000 - 1400	5000	1400	3710	5711	2239	4549	2110
24	STP 6000 - 1300	6000	1300	4770	6331	2082	5552	3270
25	STP 6000 - 1400	6000	1400	4360	6712	2239	5199	2760
26	STP 6000 - 1500	6000	1500	3900	6892	2396	4796	2200
27	STP 7000 - 1300	7000	1300	5720	7592	2082	6502	4220
28	STP 7000 - 1400	7000	1400	5000	7697	2239	5839	3400
29	STP 7000 - 1500	7000	1500	5000	8836	2396	5896	3300
30	STP 8000 - 1300	8000	1300	6520	8654	2086	7302	5020
31	STP 8000 - 1400	8000	1400	5200	8005	2239	6039	3600
32	STP 8000 - 1500	8000	1500	5200	9189	2396	6096	3500
33	STP 9000 - 1400	9000	1400	6520	10037	2239	7359	4920
34	STP 9000 - 1500	9000	1500	5200	9189	2396	6096	3500
35	STP 9000 - 1600	9000	1600	5200	10455	2553	6153	3400
36	STP 10000 - 1500	10000	1500	5800	10249	2396	6696	4100

ABOUT UNIRUB

We at Unirub Techno India Pvt. Ltd. have a very modern setup to manufacture Rubberised Fabrics, Rubber Sheets which go in to the manufacture of life Rafts, Life Jackets, Inflatable Work Boats, Fenders, Bouys and AIRCELL of conservators of oil filled Transformers.

Our company is located near Pune. It has been setup by highly exparienced rubber industry Professionals with perfect knowledge of the entire product range. We have presence in marine and shipping Industry for various inflatable products. We are major source for card clothing industry in india and quality manufacturer of Aircell for oil filled transformers.